Technical data sheet

Divisible cable gland M20, seal insert enclosed, light grey

Item number: 2024940

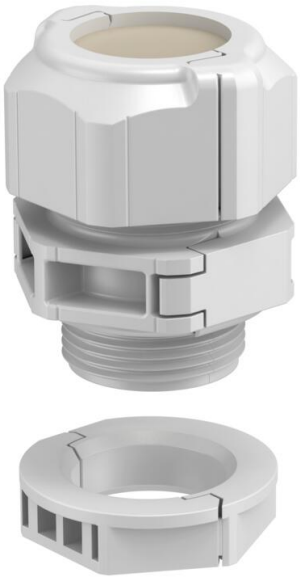

The separable cable gland V-TEC TB..
ensures – similar to all V-TEC glands – a secure sealing of the cable. The installation of pre-terminated cables or function cables, for example, is easy and quick, thanks to the splitting of the cable gland.
The V-TEC TB is also unbeatable when refitting an existing installation and as a "repair gland".
To prevent damage caused by differences in material behaviour, avoid using a mix of materials
Use products made from polyamide (cable glands) exclusively with polyamide accessory parts
lock nuts, reducers, expansions, etc.) Use products made from polystyrene exclusively with po

The closed sealing insert provides the option of universally drilling the required sealing diameter(s). The ideal aiding tool is the pair of spreading pliers which can be used to open the sealing insert. With this tool, inserting the individual cables is quick and easy.
The gland set consists of an intermediate support, a cap nut and the seal. Of course, the split locknut is also in the scope of delivery.

HALOGEN FREE | 650° | UV RESISTANT | CE | RoHS conform | UKCA | IP 67 | M | M20

PC Polycarbonate

Master data

Item number	2024940
Type	V-TEC TB20
Description 1	Cable gland, separable
Description 2	Sealing insert, closed
Manufacturer	OBO
Dimension	M20
Colour	Light grey
Material	Polycarbonate
Smallest sales unit	5
Unit of quantity	Piece
Weight	2.236 kg
Weight unit	kg/100 pc.
CO2 Footprint (GWP) Cradle-to-Gate	0,1045 kg CO2e / 1 Piece

Technical data sheet

Divisible cable gland M20, seal insert enclosed, light grey

Item number: 2024940

Dimensions

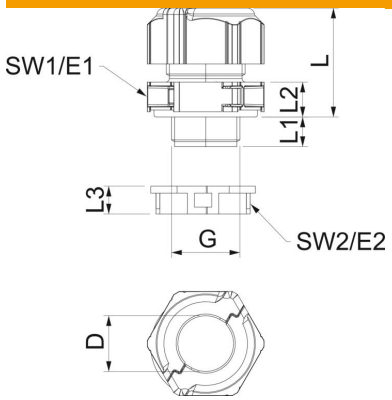

Length	30 mm
Width	29 mm
Height	40 mm
Dimension D	16 mm
Dimension E1 (mm)	33.5 mm
Dimension E2	29 mm
Dimension G	M20x1,5 mm
Dimension L	30 mm
Dimension L max.	30.5 mm
Dimension L min.	24.5 mm
Dimension L1	10 mm
Dimension L2	8.5 mm
Dimension L3	8 mm

Technical data

Number of drill holes	0
Type of seal	Sealing ring
Version for	Straight
Bend protection	no
explosion-proof	no
Flat cable gland	no
Flame-resistant	acc. to VDE 0471/DIN 695 Part 2-1, test temperature 650°C
For Ex zone	Without
For Ex zone gas	Without
For Ex zone dust	Without
Thread	M20 x 1,5
Thread type	Metric
Thread length	10 mm
Nominal thread size	20
Thread increase	1.5 mm
Fibre-glass reinforced	no
Halogen-free	yes
Unstable torque	2 Nm
Sealing insert, multiple	no
With locknut	yes
ROHS-conformant	yes
Impact-resistant	yes
WAF	30
WAF 1	30 mm
WAF 2	27 mm
Protection rating	IP67
Splittable gland	yes
Permitted temperature range, max.	80 °C
Permitted temperature range, min.	-20 °C
Strain relief option	yes