# Technical data sheet

## Magic straight connector set FS

## Item number: 6069096

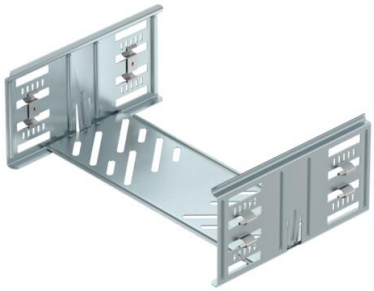

Cable tray connector with quick fastening for the screwless connection of perforated cable trays with a side height of 110 mm.
The optimised design means that the connector can be used to create radii and as a length compensation piece for large temperature deviations.

St Steel

FS Strip galvanised

### Master data

| | |
|---|---|
| Item number | 6069096 |
| Type | KTSMV 130 FS |
| Description 1 | Straight connector set |
| Description 2 | for cable tray Magic |
| Manufacturer | OBO |
| Dimension | 110x300x200 |
| Colour | zinc |
| Material | Steel |
| Surface | Strip galvanised |
| Surface standard | DIN EN 10346 |
| Smallest sales unit | 1 |
| Unit of quantity | Piece |
| Weight | 57.6 kg |
| Weight unit | kg/100 pc. |
| CO2 Footprint (GWP) Cradle-to-Gate | 2,1611 kg CO2e / 1 Piece |

# Technical data sheet

## Magic straight connector set FS

## Item number: 6069096

### Dimensions

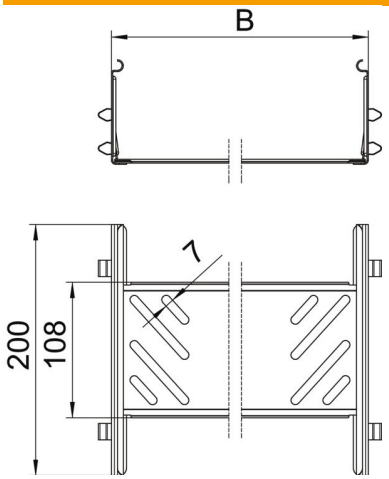


| | |
|---|---|
| Length | 200 mm |
| Width | 300 mm |
| Height | 110 mm |
| Plate thickness | 1 mm |
| Dimension B | 300 mm |

### Technical data

| | |
|---|---|
| Version for | Straight connector |
| Maintain electrical functions | no |
| Suitable for mesh cable tray | no |
| Suitable for cable ladder | no |
| Suitable for cable tray | yes |
| Suitable for cable tray system height | 110 mm |
| Adjustable connector, horizontal | no |
| Articulated connector, vertical | no |
| ROHS-conformant | yes |
| Rustproof steel, pickled | no |
| Connection type | Screwless connector |