Technical data sheet

Clamp clip, single, FT plastic pressure trough

Item number: 1169580

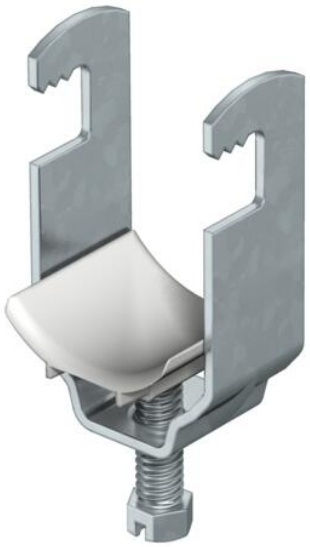

Suitable for flat, bracket and U irons of 4–12 mm material thickness.
Clip and bolt made of hot-dip galvanised steel.
Polypropylene pressure trough, halogen-free, colour light grey RAL 7035.
Version with welding and/or locknuts for use under difficult circumstances and for shake protection on request.

St Steel

FT Hot-dip galvanised

Master data

Item number	1169580
Type	2056F 58 FT
Description 1	Clamp clip
Manufacturer	OBO
Dimension	52-58mm
Material	Steel
Surface	Hot-dip galvanised
Surface standard	DIN EN ISO 1461
Smallest sales unit	50
Unit of quantity	Piece
Weight	13.05 kg
Weight unit	kg/100 pc.
CO2 Footprint (GWP) Cradle-to-Gate	0,233 kg COe / 1 Piece

Technical data sheet

Clamp clip, single, FT plastic pressure trough

Item number: 1169580

Dimensions

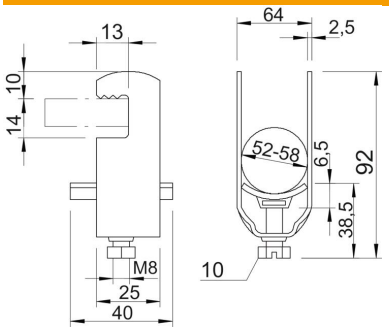

Dimension A	25 mm
Dimension B	64 mm
Dimension C	40 mm
Dimension E	13 mm
Dimension G (mm)	M8
Dimension H	92 mm
Dimension L	38.5 mm
Dimension t	2.5 mm
Dimension x	6.5 mm

Technical data

Number of cables/pipes	1
for 1 cable H	92 mm
for 1 cable L	38.5
for 2 cable H	153 mm
for 2 cable L	45.5 mm
For pipe diameter, max.	50 mm
For pipe diameter, min.	50 mm
Halogen-free	yes
Max. Tightening torque	5 Nm
With plastic trough	yes
With metal trough	no
Mounting type	Flat profile
ROHS-conformant	yes
Impact-resistant	no
Clamping range D, max.	58 mm
Clamping range D, min.	52 mm
Surface addition	hot galvanised
Material addition	Steel
With counter-trough	no
Material of trough	Plastic
Material quality of trough	Polypropylene